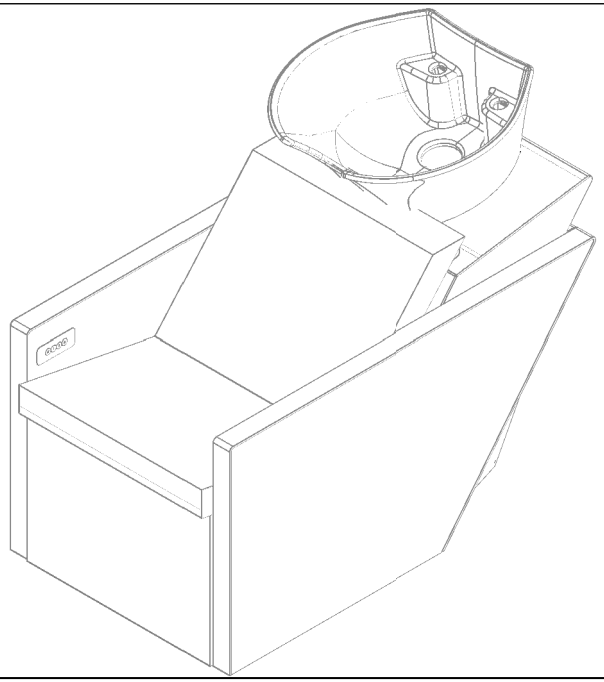

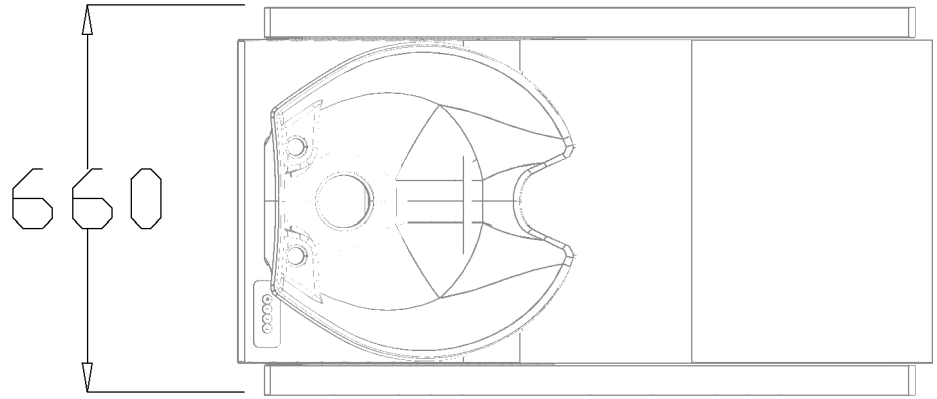

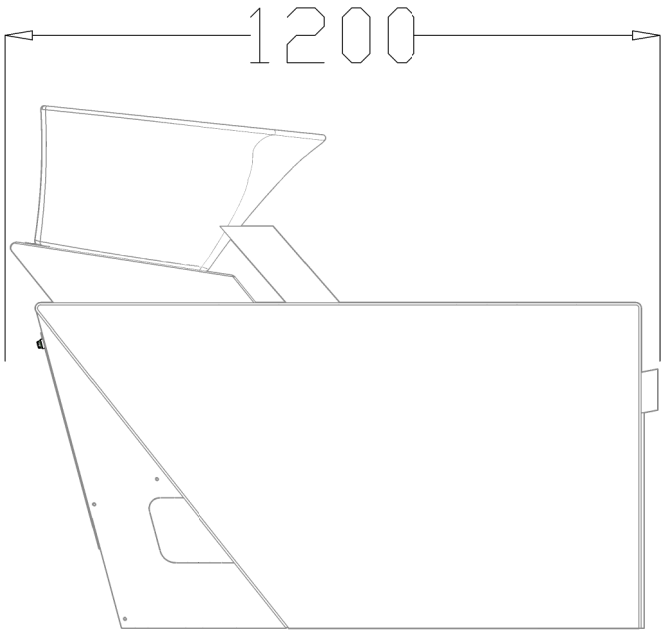

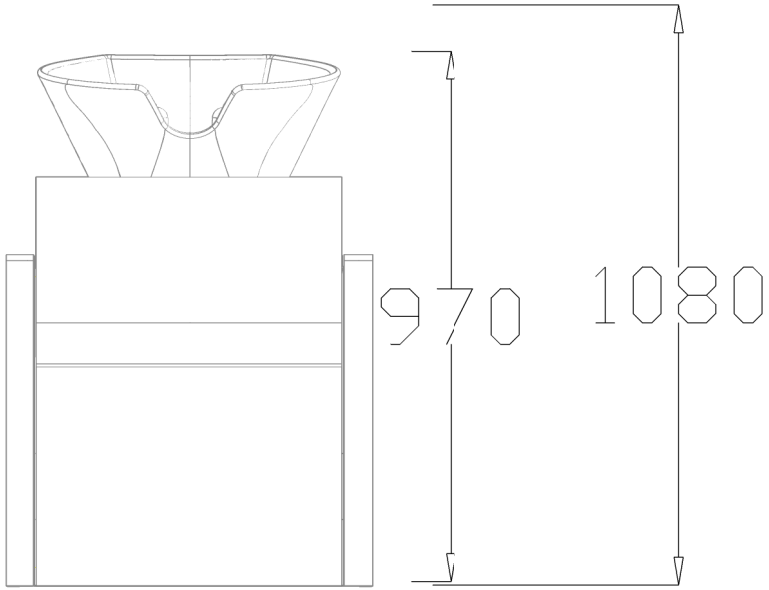

REM
T: 01282 619977
F: 01282 619617

Pure washpoint
04760 -61-62-63 04770-71-72-73
Dimension Sheet
Date: 03/08/2009 - Edition 1
Produced by: HT

NOTE: Sizes may vary slightly from shown