Solar Reception Desk 05716 (E2-2021)

Made in Britain

REM (UK) Limited, Glenfield Mill, Glenfield Road, Nelson, Lancashire BB9 8AW T: +44 (0)1282 619 977 F: +44 (0)1282 619 617 E: sales@rem.co.uk W: www.rem.co.uk

remuksalons
remuklimited
remukllmited
remuklimited
remukllmited

Product Codes:
- 05716 - Solar Reception Desk

Standard Equipment:
- LED feature lighting panel to front
- Open storage section to rear with adjustable shelf
- Cupboard section to rear with adjustable shelf
- Cable management throughout desk

Optional Equipment:
- Slide out keyboard tray
- Lockable cash drawer

Main Construction:
- Timber construction finished in high pressure laminate from the REM laminate range

Finish:
- Any laminate from the REM swatch range

Features:
- LED lighting
- Open & closed storage
- Cable management throughout desk
- Choice of REM colours

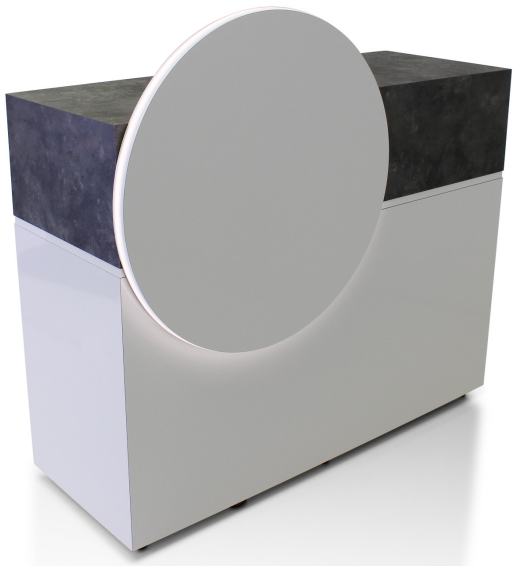

Laminate Finish Options:

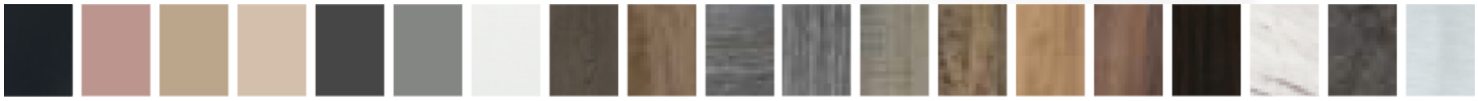

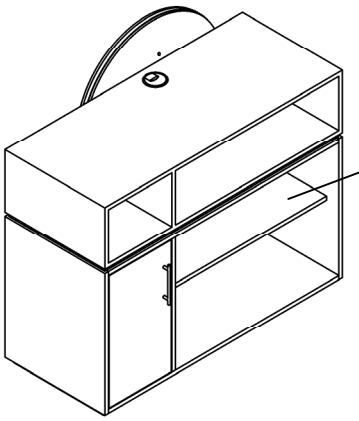

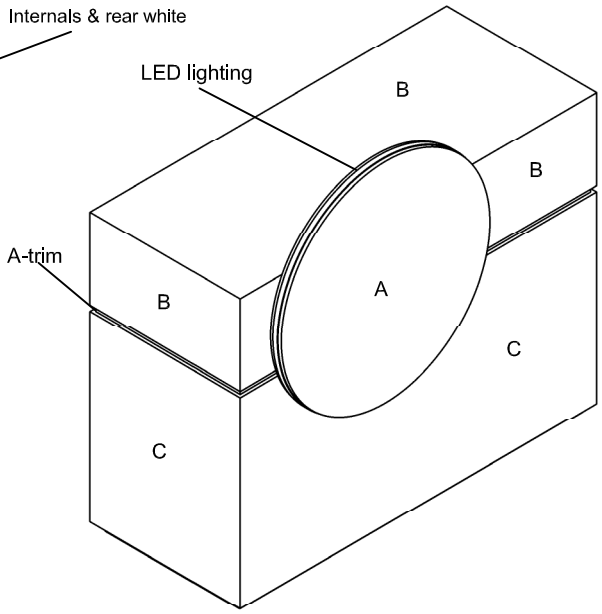

A = Laminate
B = Laminate
C = Laminate

Choice of REM laminates

Desk Options:
05870 - Lockable Cash Drawer
or
05874 - Keyboard Slide
05608 - Lock to any door
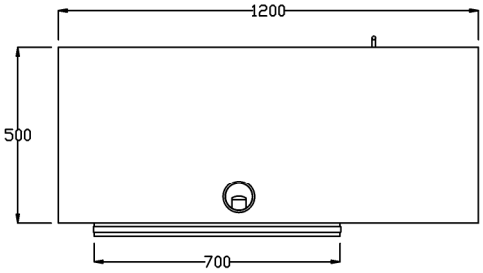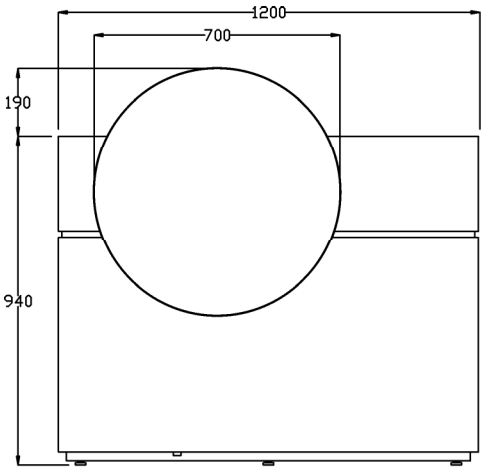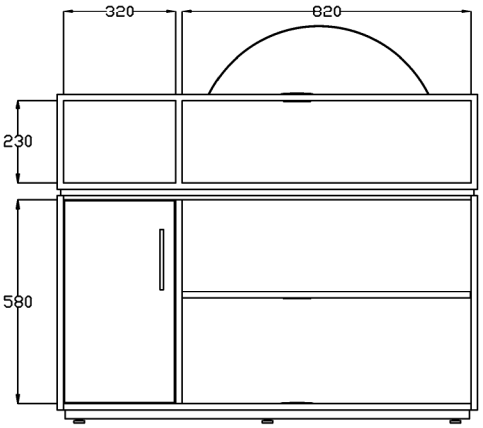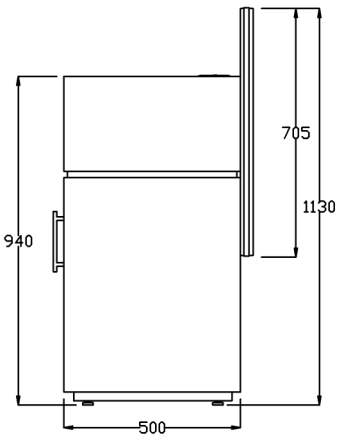
Optional extras must be clearly detailed at time of order.